RR4-TR

Quick Start Guide

Welcome to your new Remote Reader with integrated NextCentury Transceiver (Radio). The **RR4-TR** is an advanced meter reading solution that provides a high visibility remote display of one or two utility meters. It includes wireless AMR support with the NextCentury Cloud Platform. Setting up and installing the Remote Reader is quick and easy.

Packaging Contents

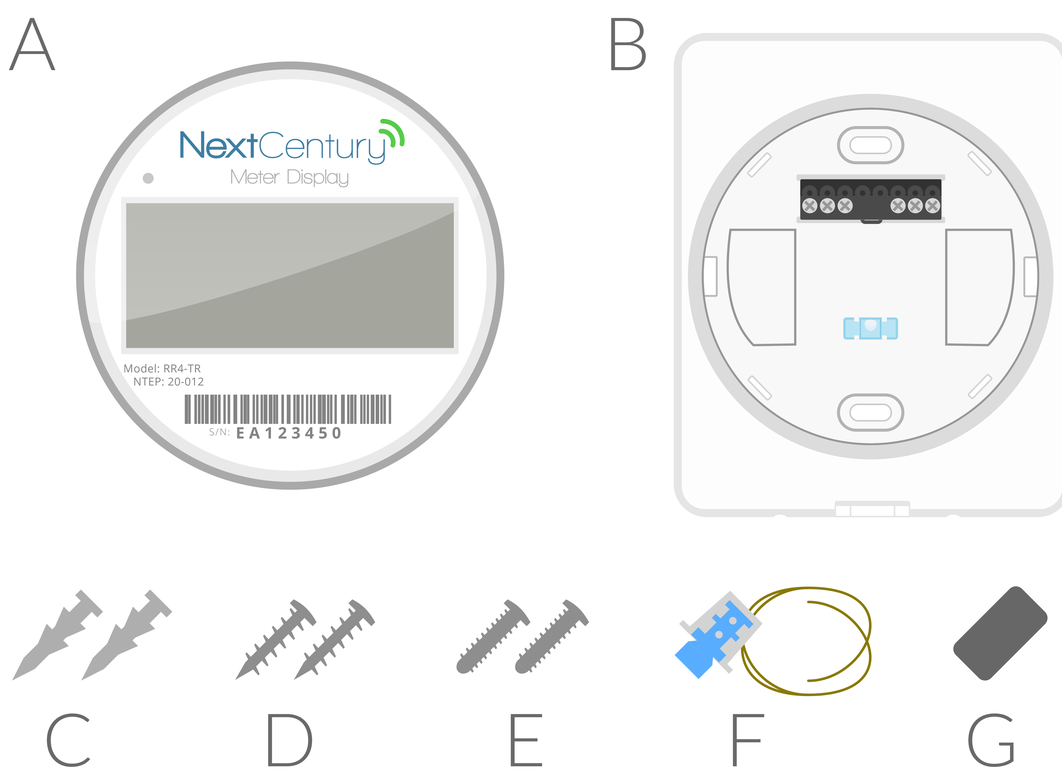

A) RR4-TR Remote Reader

B) Mounting Plate

C) Sheetrock Anchors

D) Wall Mount Screws #6-20

E) Box Mount Screws #6-32

F) Wire Security Assembly

G) Activation Magnet (one per case)

Important

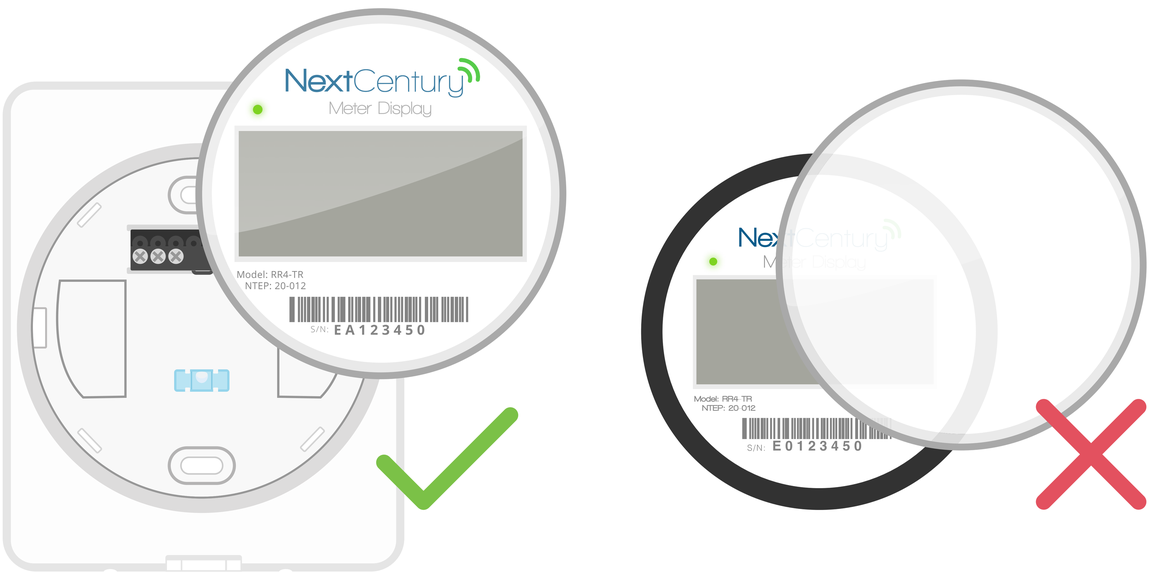

During installation, you will disconnect the Remote Reader from the Mounting Plate. It is not necessary to open the Remote Reader. The Remote Reader is a sealed, water-tight design, and should only be opened to replace the battery (10-year approximate battery life).

Additional Resources

For full installation guide, spec sheets, and additional resources, please visit:
products.nextcenturymeters.com/rr4-tr

Contact Information
Phone: 844.538.8203
Email: support@nextcenturymeters.com

RR4-TR

Installation

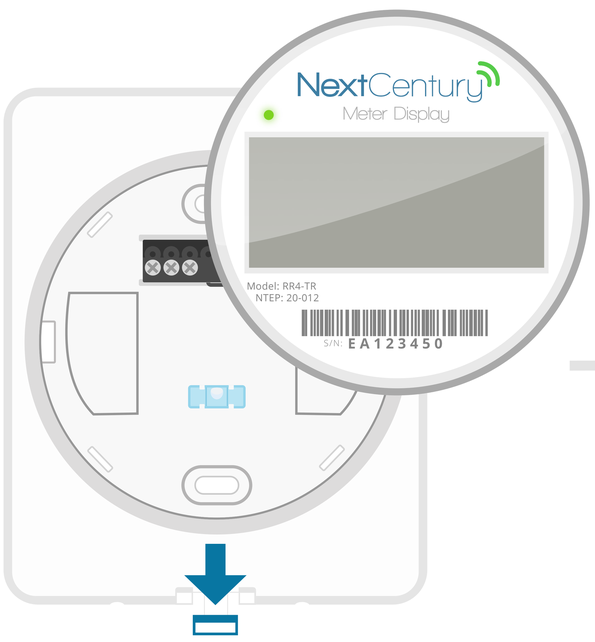

Pull Down Security Tab to Remove Remote Reader from Mounting Plate

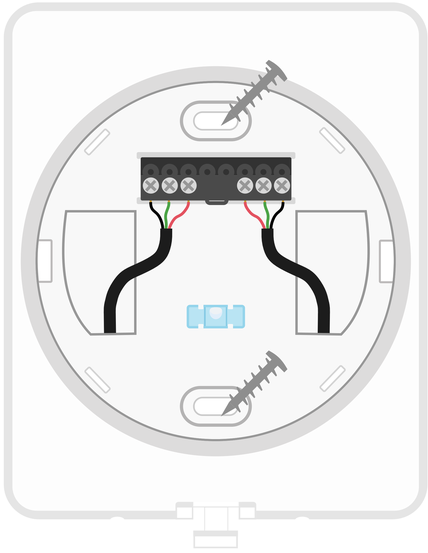

Secure the Mounting Plate and Connect Meter(s)

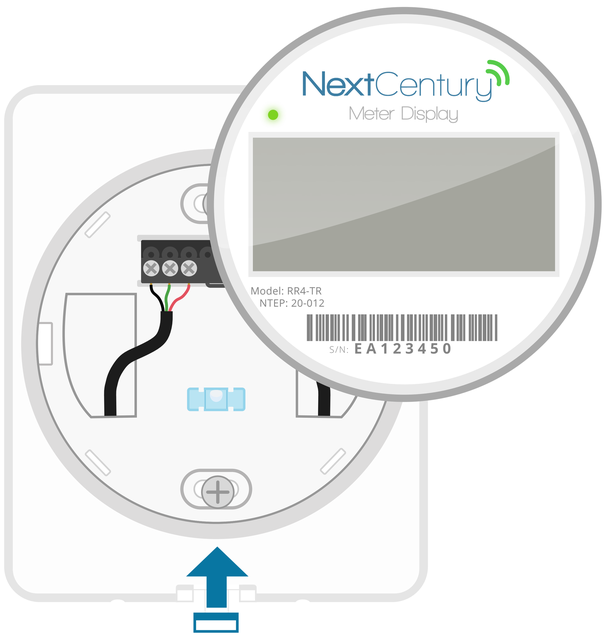

Connect Remote Reader to Mounting Plate Then Lock Security Tab

Installation Steps

1) Disconnect the Remote Reader from the Mounting Plate. Remember to first pull down on the Mounting Plate Security Tab.

2) Install the Mounting Plate using the anchors and #6-20 screws, or use the #6-32 screws to install on a single gang wall box.

3) Connect the wire output from one or two meters to the Remote Reader Mounting Plate (wiring instructions on the other side of this guide).

4) The Remote Reader ships with a default configuration to read one pulse-type water meter. To program the Remote Reader for other configurations see “Programming” section on last page.

5) Test the meter connection:
   - For pulse meters, ensure the pulse-count increments when a pulse is sent from the connected meter.
   - For encoder meters, ensure the proper read is displayed. It may be necessary to tap the display or swipe a magnet to get the latest encoder meter read.

6) Test the Integrated Transceiver’s network connection using a magnet to initiate a check-in. If the Remote Reader is programmed and able to communicate with the Gateway, the LED will blink green twice.

RR4-TR
Wiring Guide

NextCentury™
SUBMETERING SOLUTIONS

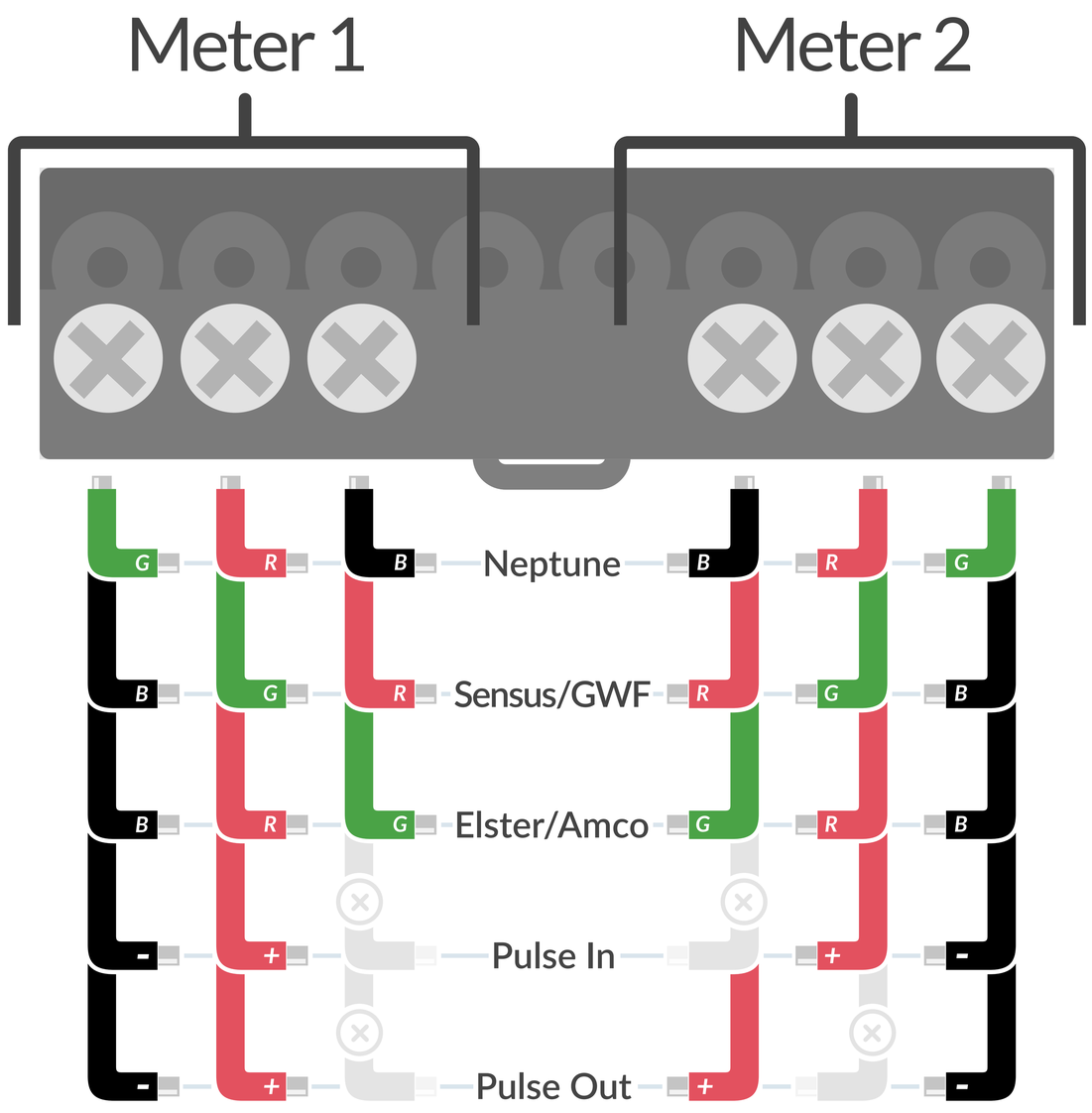

Configuration Options:

- 1x Pulse Meter - *Default* (Meter 1 Port)
- 1x Encoder Meter (Meter 1 Port)
- 2x Pulse Meters (Meter 1 & 2 Ports)
- 2x Encoder Meters (Meter 1 & 2 Ports)
- 1x Encoder & 1x Pulse (Meter 1 & 2 Ports)
- 1x Pulse & 1x Encoder (Meter 1 & 2 Ports)
- 1x Pulse with Pulse Out (Meter 1 & 2 Ports)

Wiring Guide

An interactive Wiring Guide is also available through the NextCentury Mobile App (Android and iOS Support).

Dual Meter+™

Meter+™ Technology has been developed to allow a single device to connect to virtually all modern meter outputs. These include a variety of different pulse-out meters as well as encoded output meters. Meter+™ Technology supports Neptune, Sensus, GWF, and Elster/AMCO 3-wire protocols. Simply wire the meter and program the Remote Reader with the applicable configuration. The Remote Reader includes two Meter+™ Technology ports, allowing for a large variety of configurations.

Serial Number

The Serial Number is located on the face of the Remote Reader. This identification number always ends with a “0.” When communicating with the NextCentury Web Platform through a Cellular Gateway (GW4), each meter is assigned a unique Transceiver Serial Number. The Serial Number for Meter 1 will end with a “1” and the serial number for Meter 2 will end with a “2.”

E_ _ X X X X _

Model
- “11” - RR4
- “A1” - RR4-TR (with integrated Transceiver)

Meter
- “1” - Meter 1
- “2” - Meter 2

RR4-TR

Direct Connect

NextCentury™
SUBMETERING SOLUTIONS

Note: the DC301 wireless programmer is not required for configuring this model.

Programming

Option 1: The NCSS Mobile App is used for simple in-field programming and configuration. The Mobile App allows your device to communicate directly with the Remote Reader to program and verify your installation.

Option 2: If a NextCentury Cellular Gateway (GW4) and an internet connection are available while programming the Remote Reader, setup and configuration can be completed using the Online Web Portal or Mobile App.

Mobile App Download

App Store
iOS App

Google Play
Android App

Additional Products

- **GW4:** Cellular Gateway
- **RE4:** Wireless Network Repeater
- **Pre-Programming:** Equipment pre-configured and ready for install

For more, visit: www.nextcenturymeters.com or contact sales@nextcenturymeters.com